ATMOSPHERE VACUUM **24058 OR**

ENVIRONMENTAL CONDITIONS

TEMP	-40° TO +225°F
PRESSURE	
VACUUM	
CHEMICALS	
OTHER	

QC TESTING

ELECTRICAL HIPOT @	600VAC
VACUUM LEAK @	1 X 10(-8) STD cc He/sec
PRESSURE LEAK @	NONE

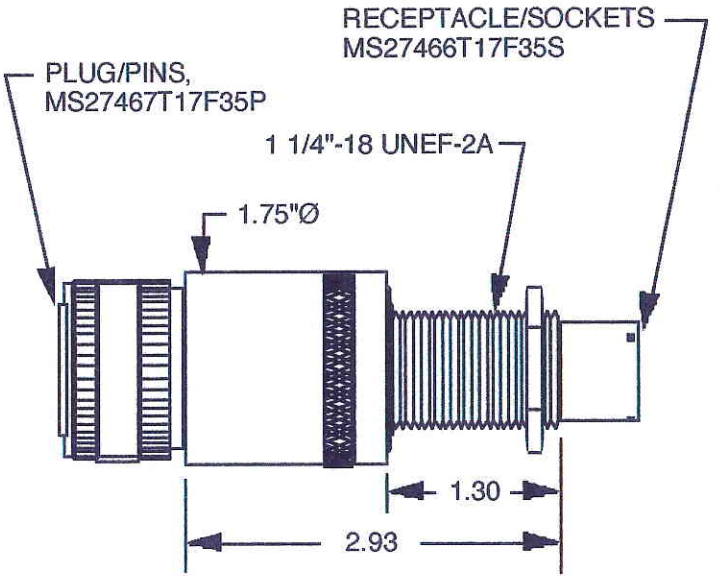

HOUSING SPECIFICATIONS

HSG P/N	11058-3-3
THREAD	1 1/4"-18 UNEF-2A
MAT'L	STAINLESS STEEL
TYPE	FACESEAL O-RING

LEAD WIRE / CONNECTOR DATA

CONNECTOR INSERT CONTAINS 55 #22AWG GOLD PLATED COPPER CONTACTS.

NOTES:
1. CONNECTOR INSERT CONTAINS 55 #22AWG GOLD PLATED COPPER CONTACTS.

Customer Approval:
By: MPK
Date: 8/27/04

UNLESS NOTED: All Dimension In Inches, Remove All Burrs,
Break All Sharp Edges, Tolerances: .XX ±.01, .XXX ±.005

DOUGLAS ENGINEERING COMPANY
14 Beach Street, Rockaway, NJ 07866
PH: 973-627-8230 FX: 973-627-5798

ECN#	REV	APP'D	DATE

Drawn TW
Date 8/27/2004
App'd MPK
Date 8/27/04

Title
1 1/4"-18 PBTR POTCON SET

Dwg No **24058** Rev. **OR**

Ref: CATALOG SCALE: NTS SHEET 1 OF 1

DE 2 **MASTER**

FIRST ARTICLE INSPECTION: ☐ REQUIRED ☐ NOT REQUIRED

VALID THRU July 2012 ~~Jan. 2011~~